NIMBLE™ SCOOTERS

KICK, SCOOT & CARRY

Congratulations on your new Nimble Classic cargo scooter! We hope you enjoy riding it.

SHOW US, GET US FREE GIFT

We always love to see how our customers make use of their cargo scooter. Whether it's to go to the beach or move gear around a warehouse, it's important for us to know.
So, send us a photo of how you use your Nimble Scooter, and **we'll send you a free accesssory!**

STAY CONNECTED

We are active on Facebook, Twitter and Instagram! Follow us to see our scooters in action, our production progress and company news. Share what you're doing with your scooters, and we'll talk about it!

RETURN POLICY

Items may be returned within 30 days of receipt for a full refund and require a 10% restocking fee. Items must be returned at the customer's expense in their original packaging and meet the following conditions:

- Product must be in new condition
- *For example: no cracks, scratches, dirty or marked tires, or any indications of usage*
- Return shipping costs are the responsibility of the customer
- Items must be returned within 30 days

For more information regarding returns, visit *http://nimblescooters.com/contact/returns*

COMMUNITY

Facebook.com/nimblescooters
Twitter @nimblescooters
Instagram @nimblescooters
Pinterest.com/nimblescooters

#nimblescooters
#kickscootcarry
#cargoscooters

ASSEMBLY INSTRUCTIONS & MAINTENANCE

Updated: 12/2015

NIMBLE™ SCOOTERS

MODEL: NIMBLE CLASSIC

Assembling your Nimble Classic takes approximately 20 -45 minutes based on experience. We recommend working with another person on a flat surface such as a table or on the floor.

If possible, assemble your scooter on a soft surface such as a mat or carpet to avoid scratching during assembly.

ASSEMBLY VIDEO

You can also view our assembly videos at http://nimblescooters.com/assembly

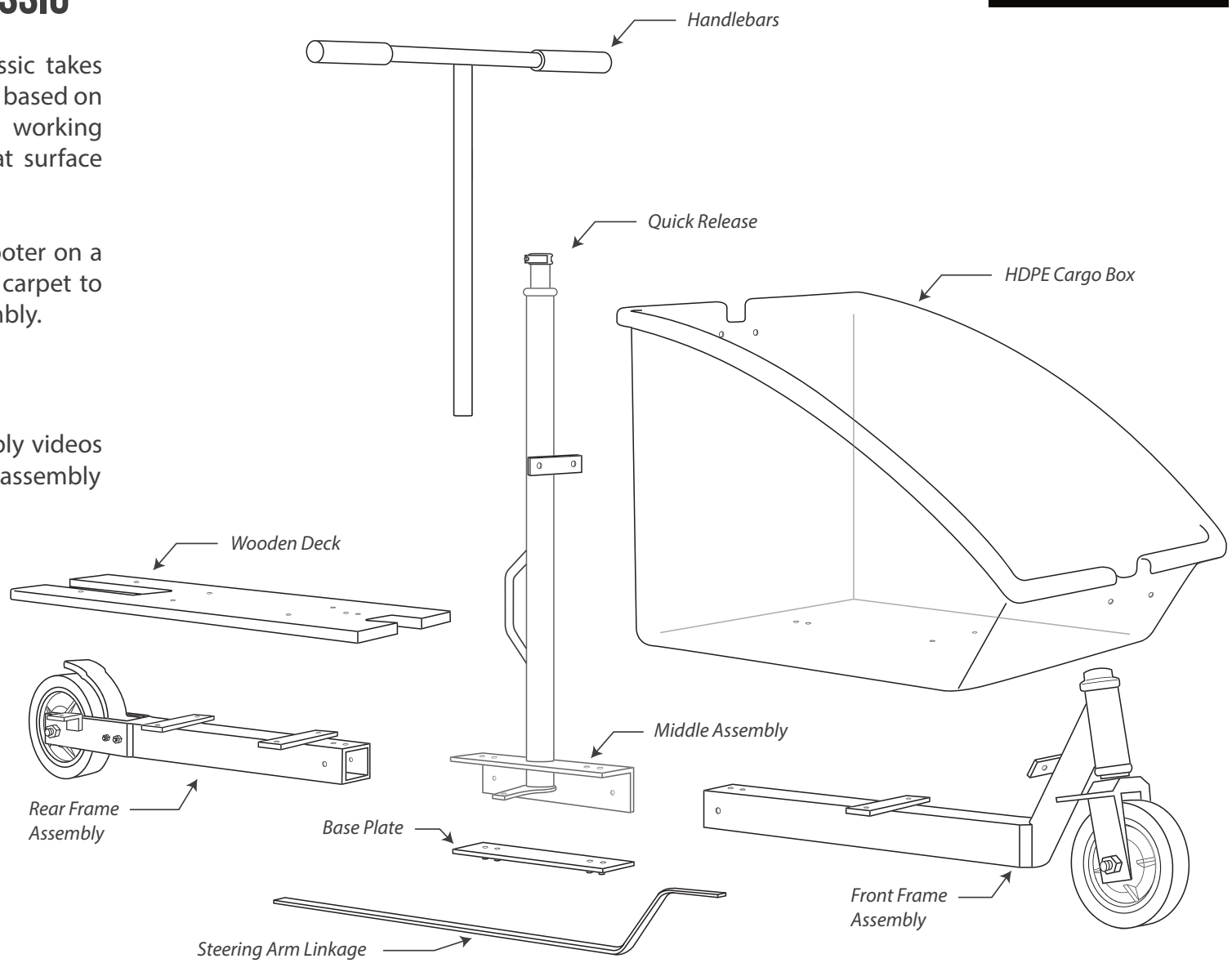

CONTENT

- Handlebars
- Baltic Birch Wooden Deck
- Front Frame Assembly
- Middle Frame Assembly
- Rear Frame Assembly
- Base Plate
- Steering Arm Linkage
- HDPE Cargo Box
- 1 Pack of Screws and Bolts

1:1 SCALE HARDWARE SIZING CHART

Use this size chart to identify your hardware

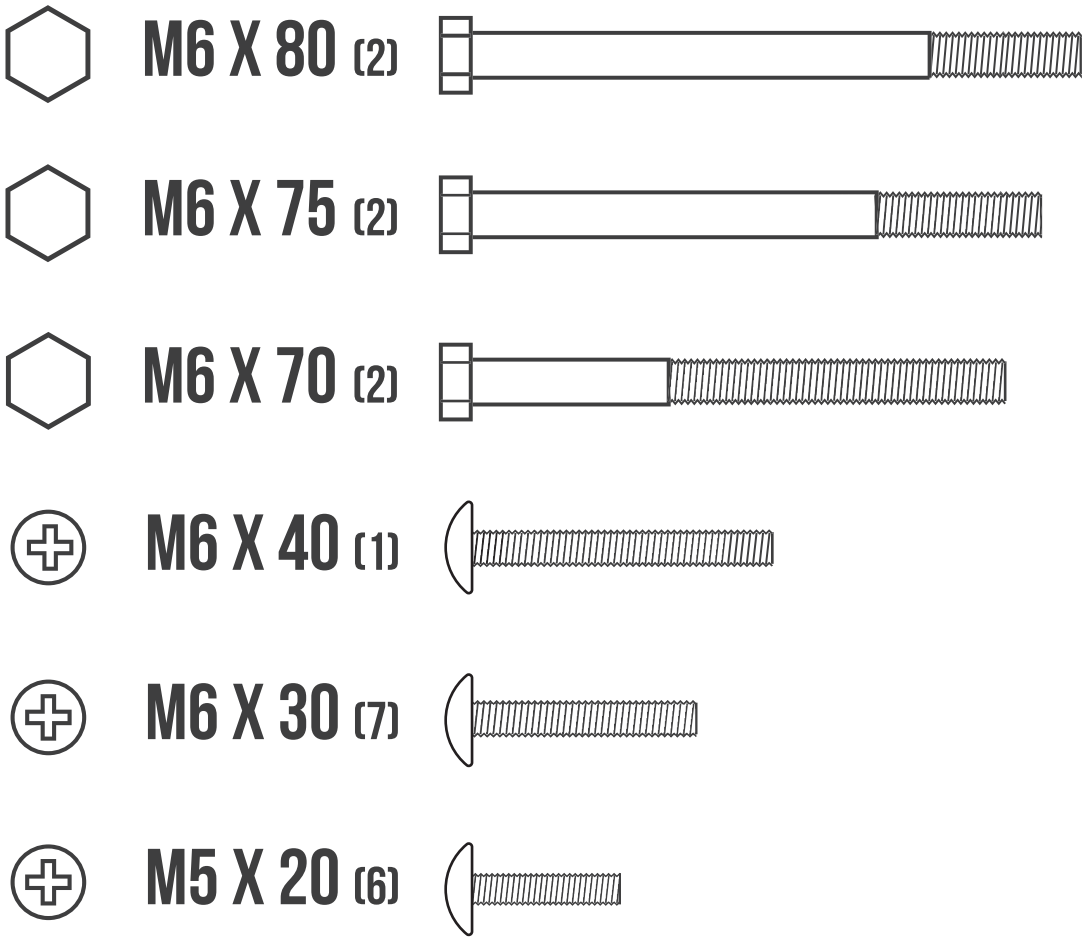

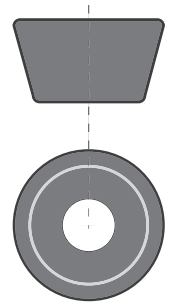

Rubber Bushing (1)

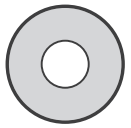

Nylon Washer (2)

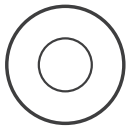

Large Metal Washer (4)

Small Metal Washer (20)

M6 Locknut (12)

M5 Locknut (6)

TOOLS NEEDED

The most basic tools you will need to assemble your Nimble Classic are shown below.
You can speed up assembly by using more advanced tools, such as **socket wrenches** and **power drills**.

M8 COMBINATION WRENCH

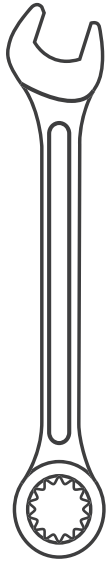

M10 COMBINATION WRENCH

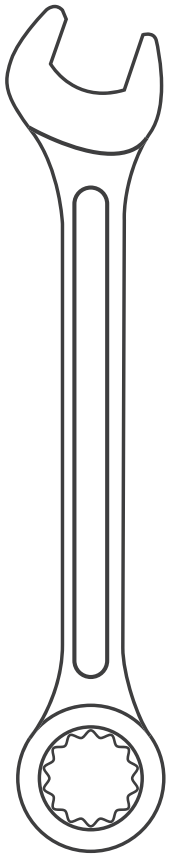

3/4" COMBINATION WRENCH

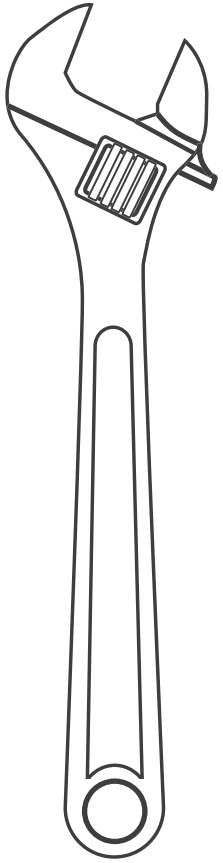

MEDIUM - LARGE SIZE CRESCENT WRENCH

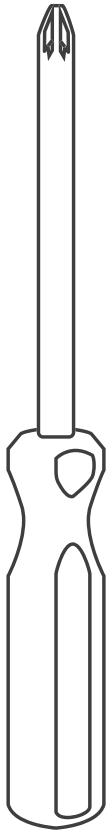

PHILLIPS HEAD SCREWDRIVER

1

Attach the Rear Frame Assembly to the Middle Frame Assembly with a hexagonal M6x70 bolt and metal washers.

Before assembly, rotate the steering key so that it is perpendicular to the frame.

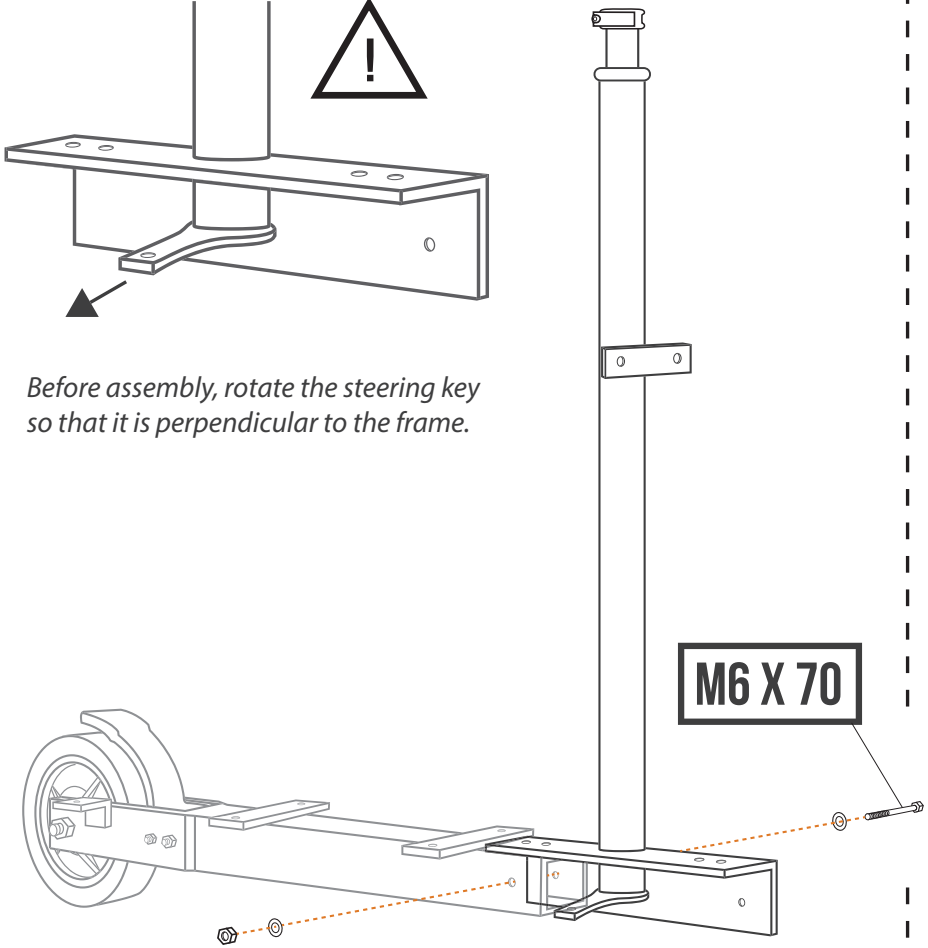

2

Attach the deck by threading the two M6x80 bolts with large metal washers through to the base-plate.

Use six M6x30 bolts with washers to secure the deck.

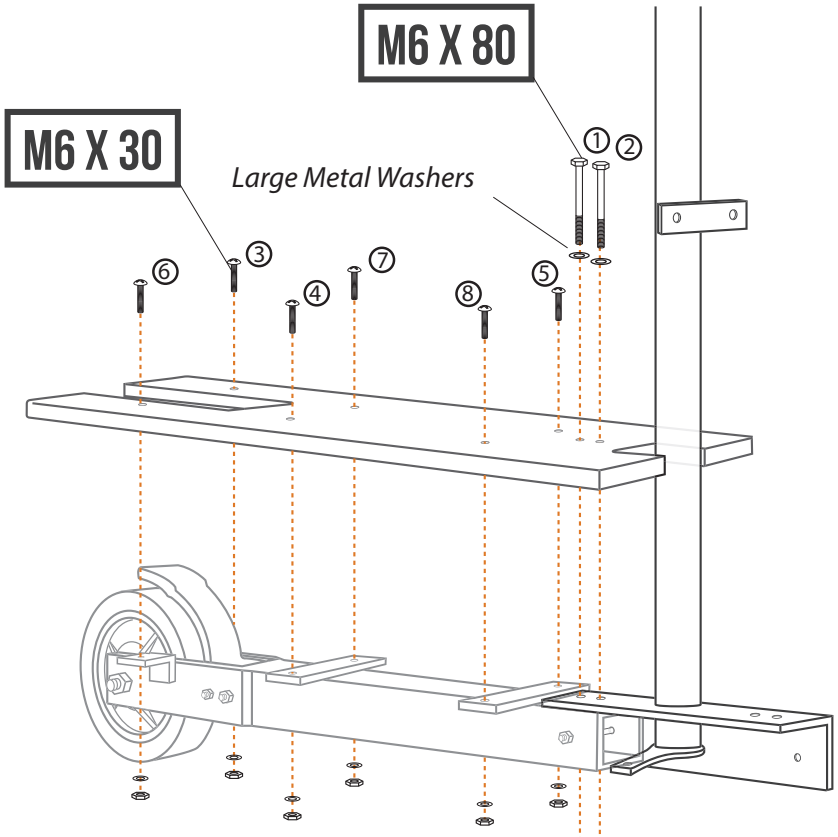

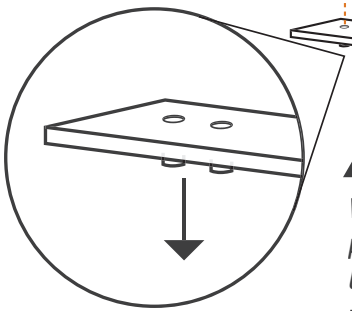

Warning: Make sure the protruding heads on the base-plate face towards the ground.

3 Loosely attach the Front Frame Assembly using the second **M6x70** bolt with metal washers.

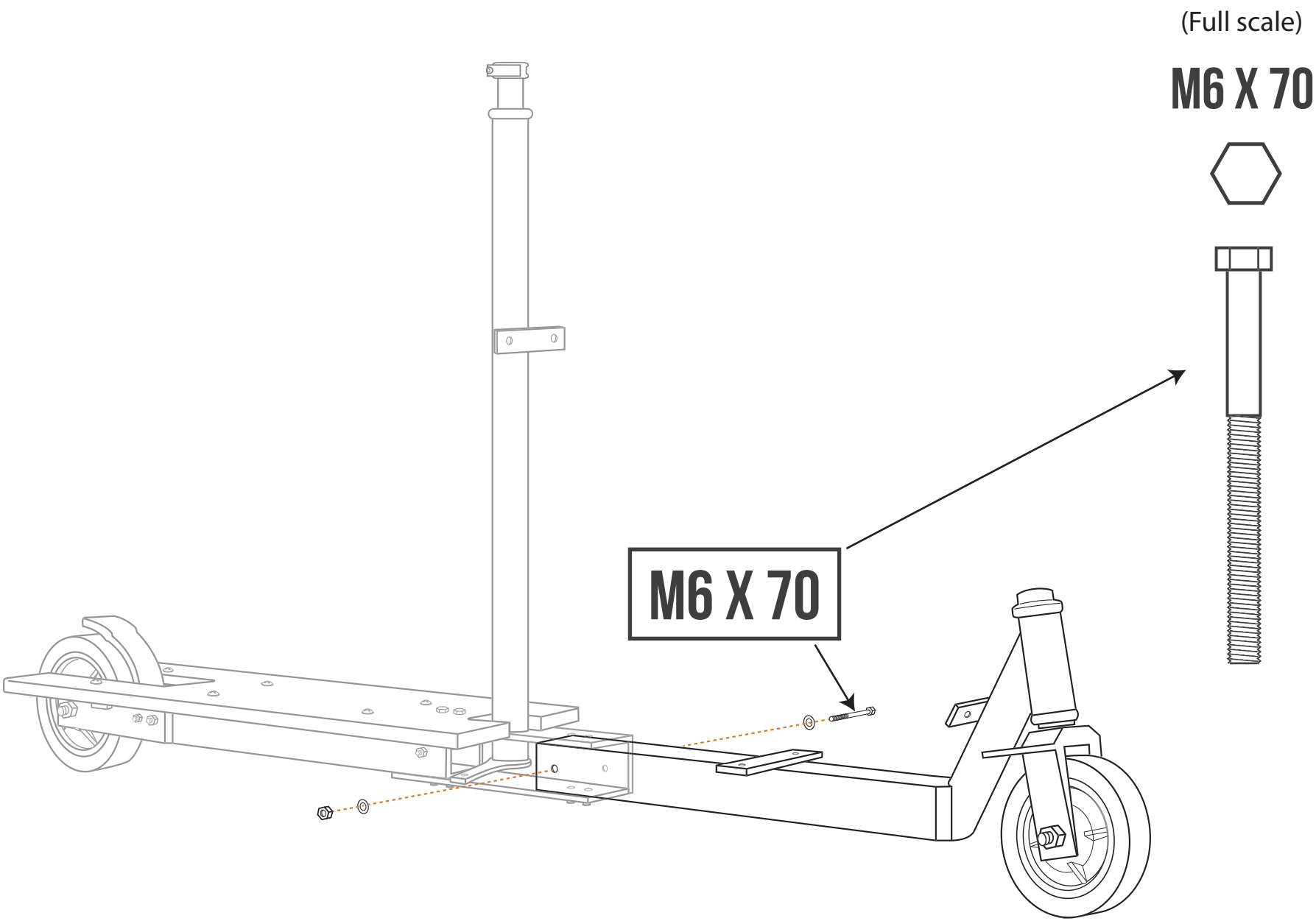

Follow the numerical order shown below, loosely bolt on the Cargo Box using **six (6)** M5x20 bolts, **two (2)** M6x75 bolts, metal washers and locknuts.

After the bolts are in place, go through and tighten all of bolts in the same order.

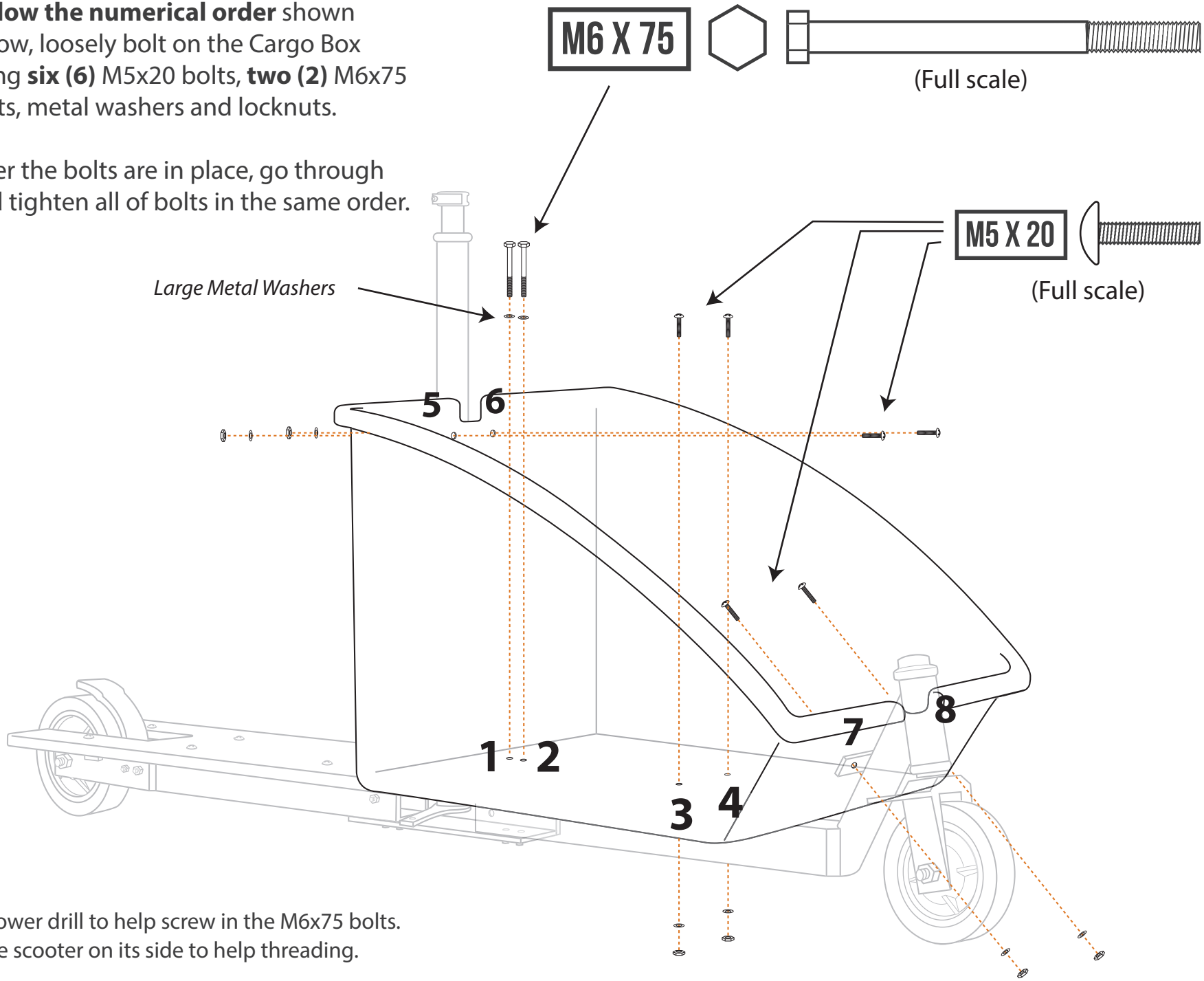

★ **TIP**

Use a power drill to help screw in the M6x75 bolts.
Lean the scooter on its side to help threading.

5

a. Attach the steering linkage to the steering key with an M6x30 bolt, a nylon washer, 2 metal washers, and 2 lock nuts.

b. Next, attach the linkage to the front fork with the M6x40 bolt, a nylon washer, 2 metal washers, the rubber bushing and 2 lock nuts.

The steering linkage should be tightened enough to feel snug, yet still able to swivel freely.

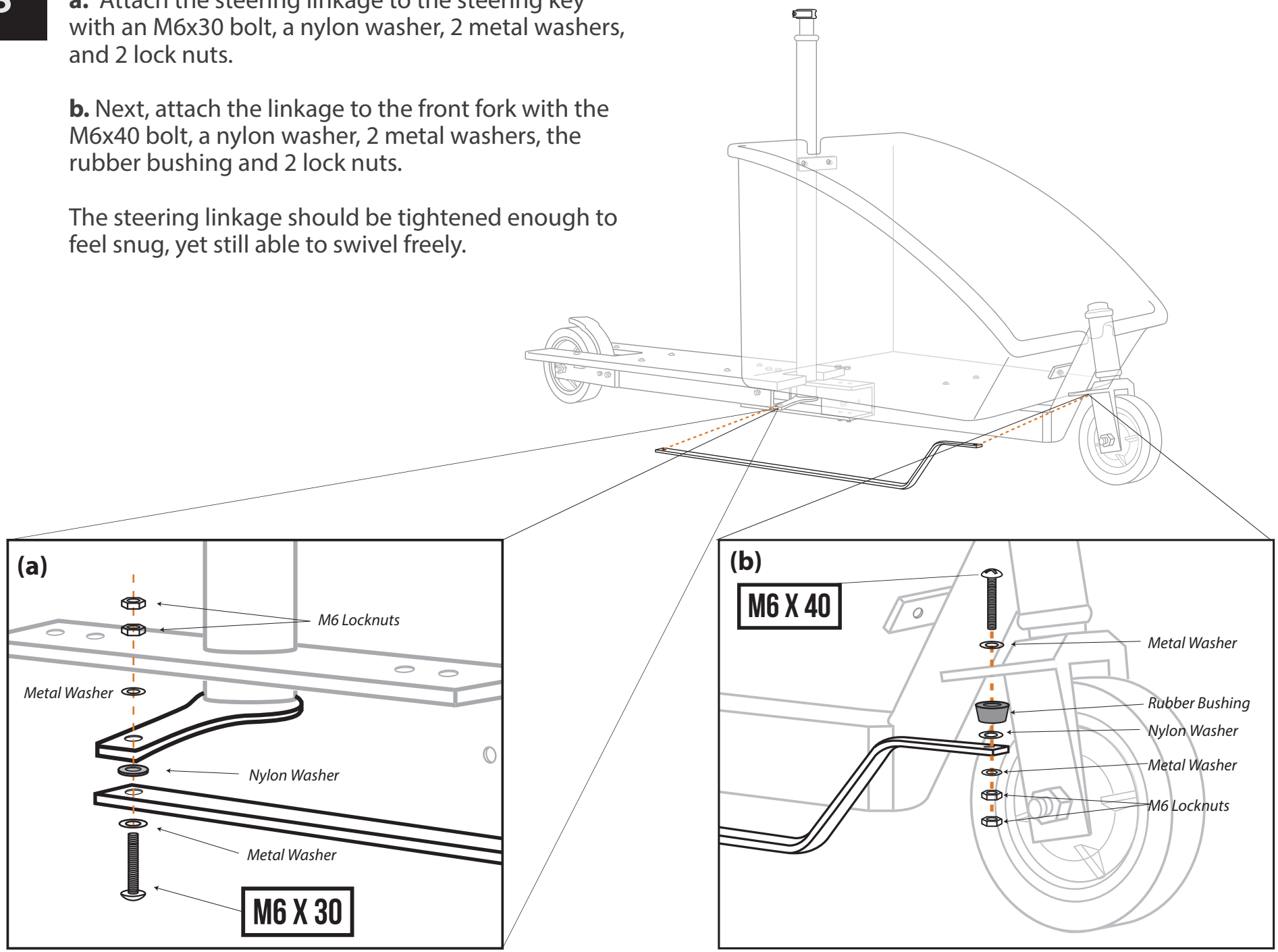

6

Slide the handlebar into the Middle Frame Assembly. Align the handlebar perpendicularly with the front wheel as shown in Figure 5.1 and adjust to a comfortable height.

Place it at about waist level, when you are on the scooter. Your arms should be slightly bent when your hands are on the handgrips. **Tighten firmly with the quick release.**

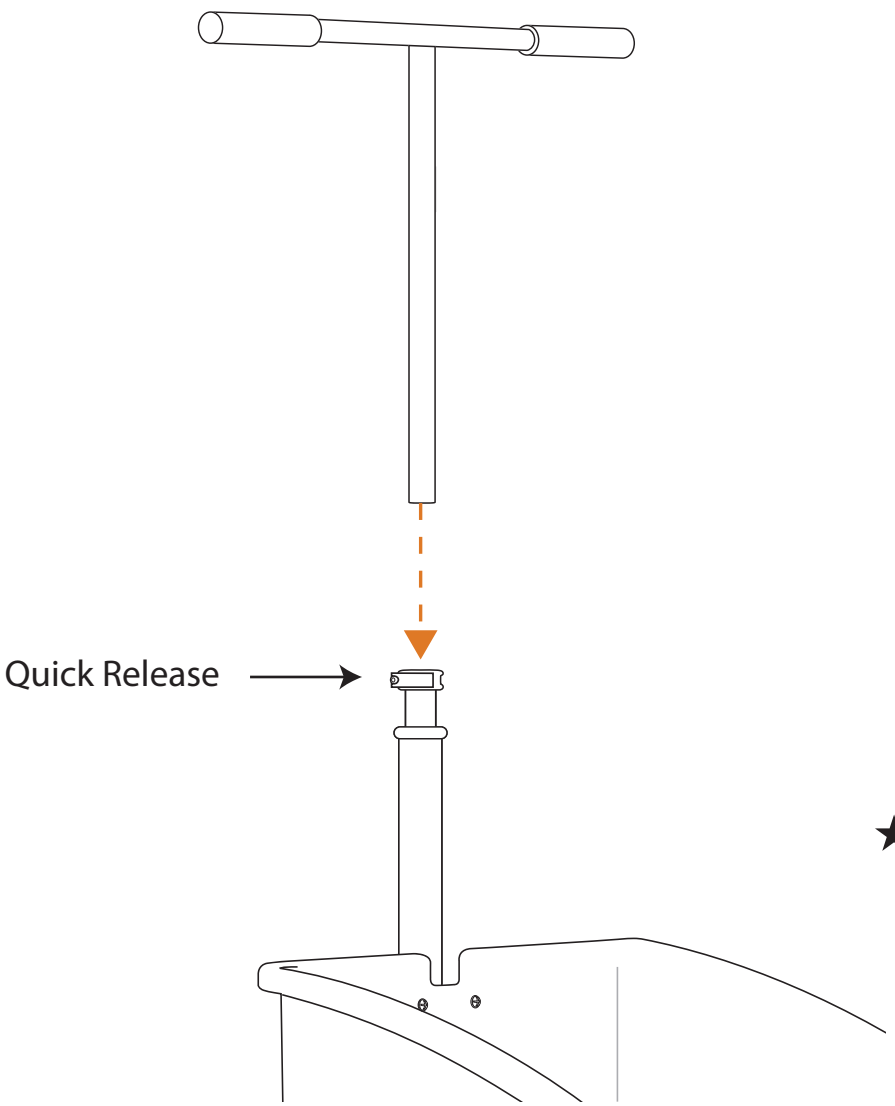

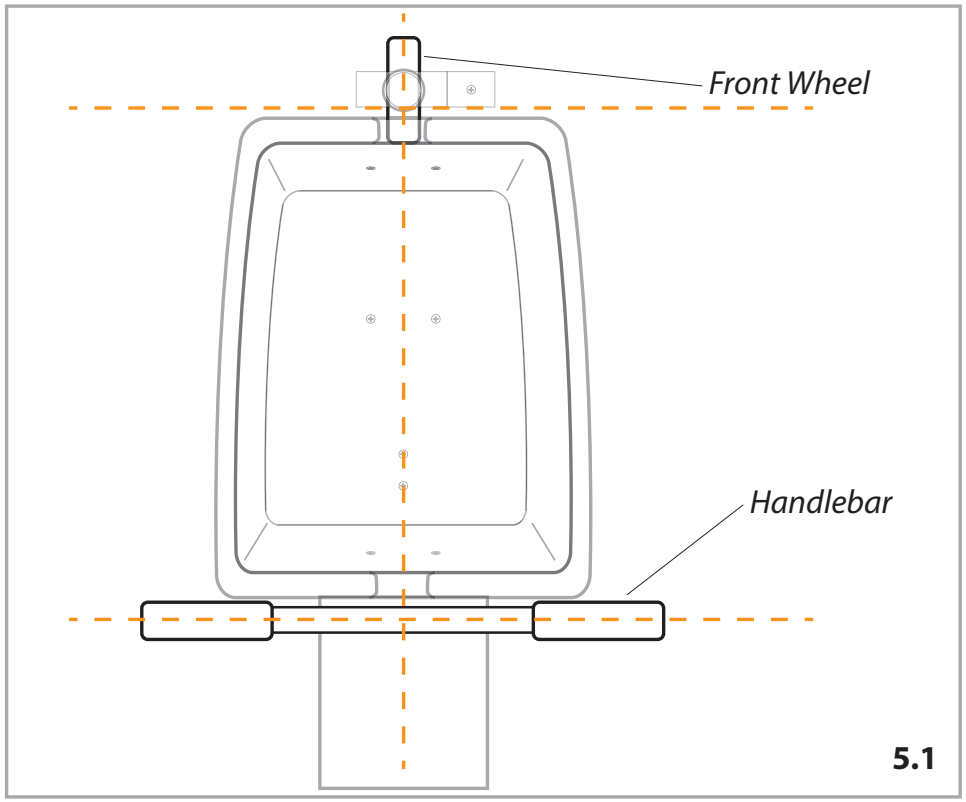

★ TIP

Handlebar not sliding in the post? Loosen the ring and try wiggling the handlebar in. You can also use a hammer with a soft end to gently tap the handlebar in. Make sure the wheel is aligned with the handlebars, for accurate steering. Once it is in, make sure the ring is tightly fastened.

7

Inspect the entire scooter and **tighten all of the remaining loose bolts.**

Your scooter is now ready to ride!

For your safety, we advise you to review all of our security warnings on the next page.

NIMBLE™ SCOOTERS

www.nimblescooters.com

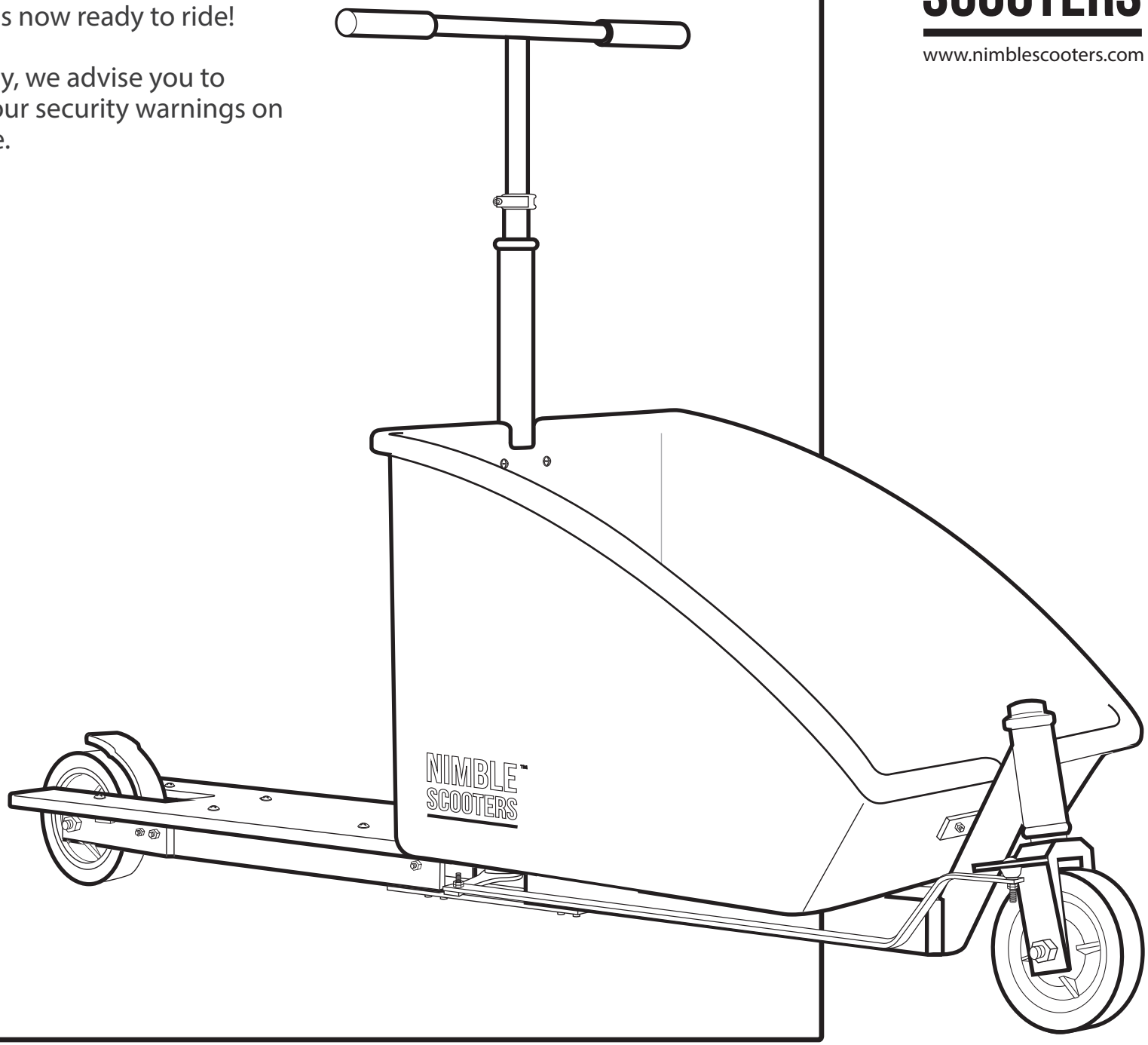

BEFORE RIDING

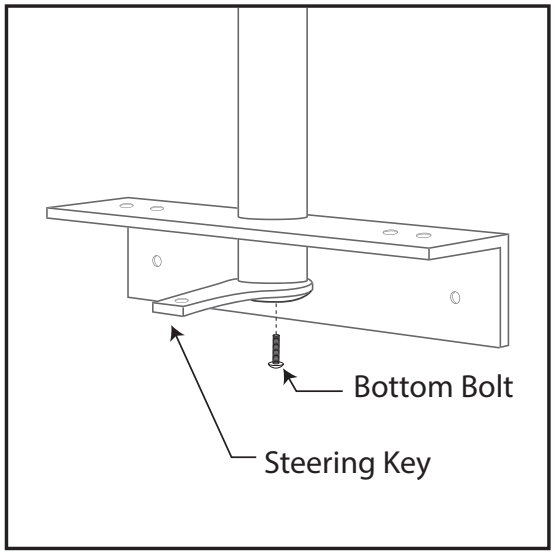

Inspect the steering key and make sure that the bottom bolt is firmly seated so that the steering key does not fall loose.

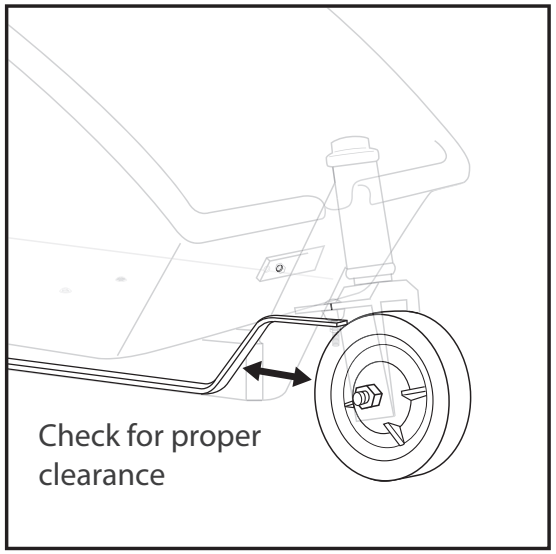

Test the steering and alignment of the front wheel. Make sure that the steering linkage does not touch the front wheel.

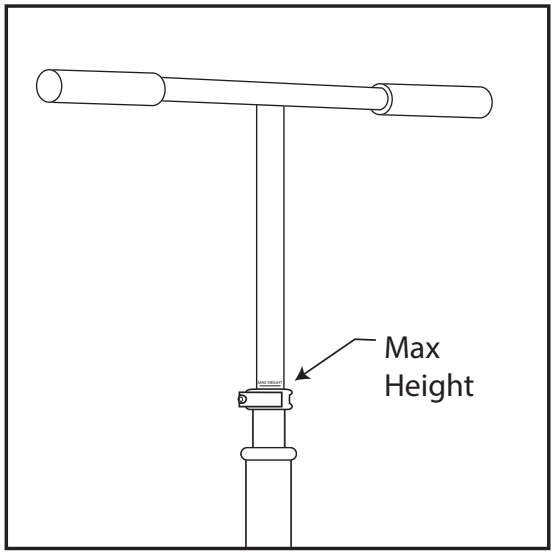

Be sure that the handlebar height does not surpass the maximum height line.

MAINTENANCE

- Periodically check all bolts to ensure that they are tightened before riding.
- If the steering alignment or height is incorrect, readjust the handlebar placement.
- You can adjust the rear brake tension by slightly loosening or tightening the brake bolts.
- If the steering linkage touches the front wheel, it may have been damaged. In this case, do not ride your scooter.

SAFETY

Please review these security warnings, as labeled on the scooter.

- Scooter is intended for one operator only and for carrying belongings; any other use is dangerous and can result in injury or death.
- Front cargo box is not intended for passengers; improper use can result in injury or death.
- Scooter should not be used on public roads.
- While riding, please respect all road safety rules.
- If used at night or in dark conditions, owner must equip scooter with front and back lights and reflectors.
- Helmet should be worn at all times when operating scooter.
- Do not ride the scooter under the influence of drugs, alcohol, or other substances.
- Children under 14 should ride under the supervision of an adult.

For more safety and usage notices, visit *http://nimblescooters.com/safety*